C (2:1)

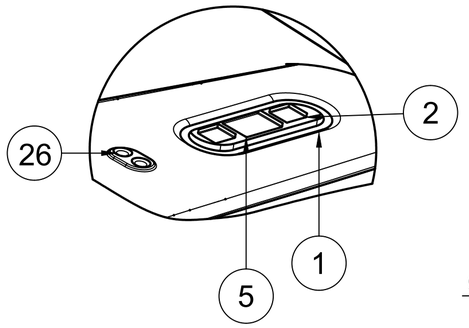

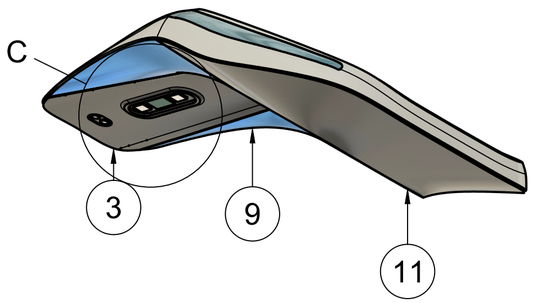

TOP VIEW

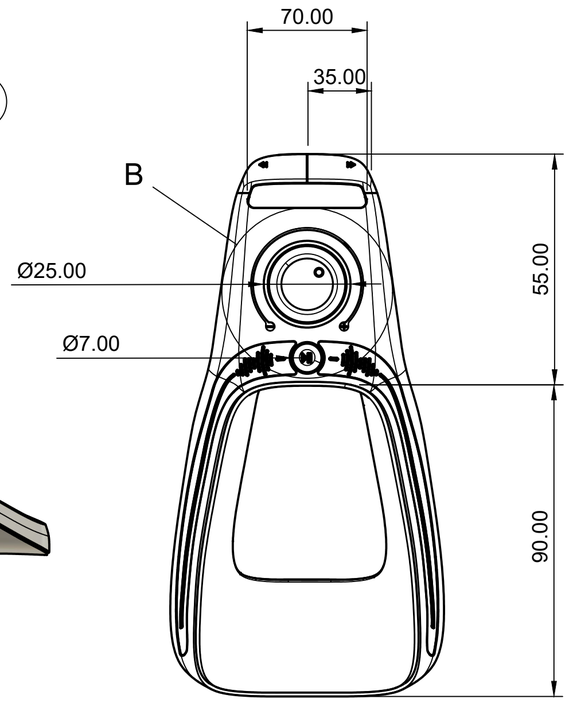

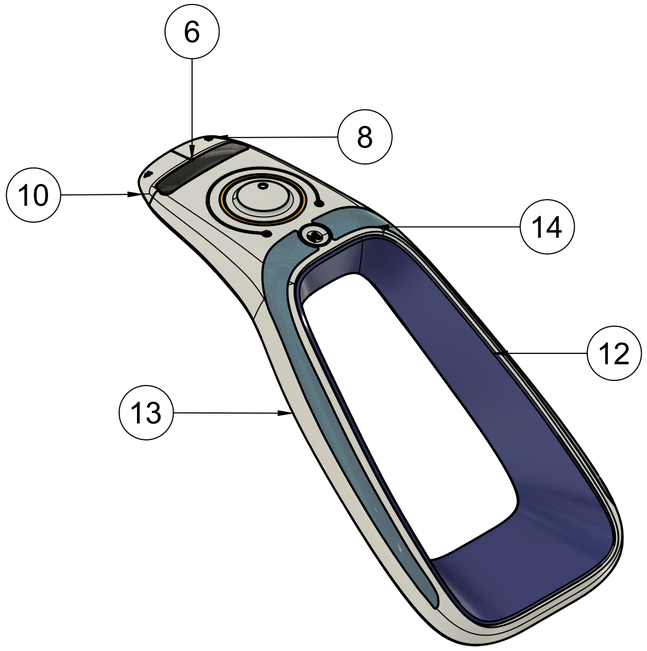

B (2:1)

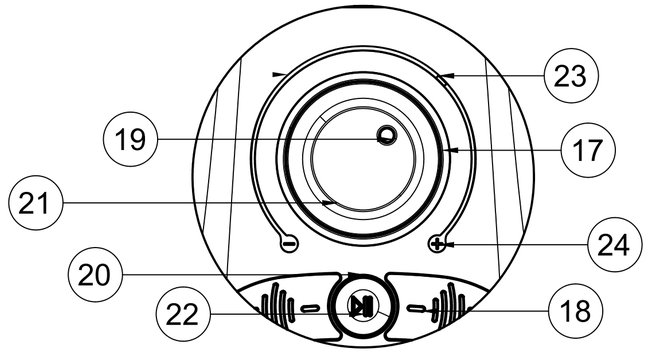

SIDE VIEW

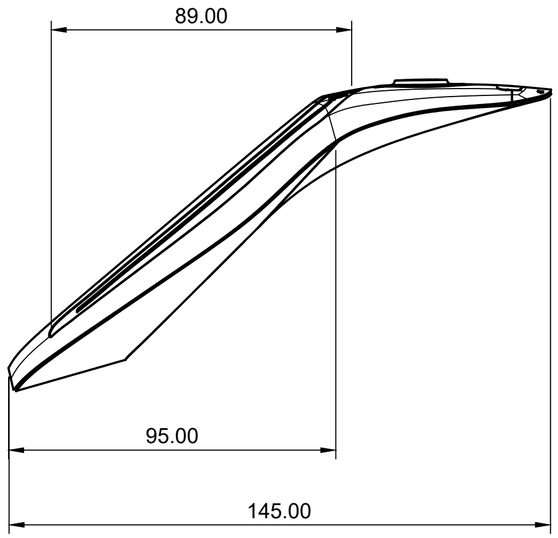

FRONT VIEW

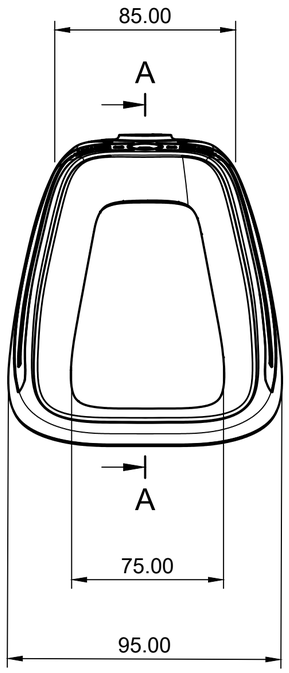

SECTION A--A

A-A (1:1)

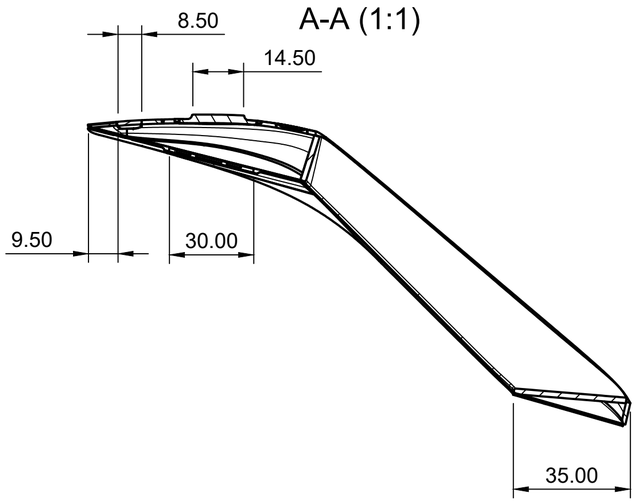

İtem	Qty	Part Name	Material
26	2	Anot / Katot	Gold 6061
25	1	-	Polystyrene, High Impact
24	1	+	Polystyrene, High Impact
23	1	Volume Led	Epoxy Resin
22	1	Play-Stop Button	Polystyrene, High Impact
21	1	Sktrach Wheels	Polystyrene, High Impact
20	1	Play Stop Led Cover	Epoxy Resin
19	1	Sktrach Wheels Led	Epoxy Resin
18	1	Interactive Music Led	PMMA Plastic
17	1	Sktrach led	Epoxy Resin
16	1	Play led	Epoxy Resin
15	1	Stop led	Epoxy Resin
14	2	Interactive Glass	Glass, Cast, Gray
13	1	Main Shell	Polystyrene, High Impact
12	1	Slicon Part	Rubber, Silicone
11	1	Bottom body	Rubber, Nitrile
10	1	Left click	Polystyrene, High Impact
9	2	Interactive light	Epoxy Resin
8	1	Right click	Polystyrene, High Impact
6	1	İnteractive screen	Glass, Cast, Gray
5	1	Scanner	FR4
3	1	Bottom cover	Rubber, Nitrile
2	2	Gyroscope	Aluminum 6061
1	1	Scanner glass	Glass, Cast, White

Parts List

NOTES : UNLESS OTHERWISE SPECIFIED

1. DIMENTIONS AND TOLERANCES ARE IN ACCORDANCE WITH ISO_128
2. INTERPRET DRAWING IN ACCORDANCE WITH ISO_128
3. SCREW THREADS SHALL BE IN ACCORDANCE WITH ISO_128
4. DIMNETIONS ARE IN MILLIMETERS
5. SURFACE ROUGHNESS OF BODY PLASTIC ABS SHALL BE 104 Ra PER ISO B46.1
6. REMOVE ALL BURRS AND SHARP EDGES 0.1mm MAX RADIUS OR CHAMFER
7. INTERNAL CORNERS 0.1mm MAX RADIUS
8. DIMNETIONS APPLIED AFTER ANODIZE.

Dept. Industrial Design	Technical reference Picky	Created by Furkan Ergenç 5.07.2021	Approved by Furkan Ergenç 5.07.2021
PICKY YOU ARE THE DJ		Document type Technical Drawing	Document status Iso Technical Drawing
		Title PD 498-Pıcky Furkan Ergenç	DWG No. IEU_PD 498
		Scale 1/1	Rev. 1 / Date of issue 5.07.2021 / Sheet 1/1